Self Clinching Nuts

ES-832-1-S10

Finish:Zinc on Steel
None on Stainless

Select Part No.

Select Type and Material

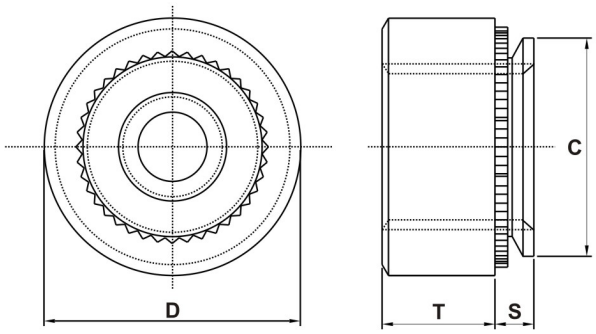

How to order American Standard Self-Clinching Nuts

Type / Material: Carbon Steel	Type / Material: Stainless Steel	Part No.	Thread Size	S Max.	Min. Sheet Thickness	Hole Size In Sheet +.003 −.000	C Max.	D ± .010	T ± .010	Min. distance centre line hole to sheet edge
ES	ECLS	256-0	2-56	.030	.030	.166	.165	.250	.070	.190
		256-1		.038	.040					
		256-2		.054	.056					
ES	ECLS	348-0	3-48	.030	.030	.166	.165	.250	.070	.190
		348-1		.038	.040					
		348-2		.054	.056					
ES	ECLS	440-0	4-40	.030	.030	.166	.165	.250	.070	.190
		440-1		.038	.040					
		440-2		.054	.056					
		440-3		.087	.091					
ES	ECLS	632-0	6-32	.030	.030	.1875	.187	.280	.070	.220
		632-1		.038	.040					
		632-2		.054	.056					
		632-3		.087	.091					
ES	ECLS	832-0	8-32	.030	.030	.213	.212	.310	.090	.270
		832-1		.038	.040					
		832-2		.054	.056					
		832-3		.087	.091					
ES	ECLSS	1024-0	10-24	.030	.030	.250	.249	.340	.090	.280
		1024-1		.038	.040					
		1024-2		.054	.056					
		1024-3		.087	.091					
ES	ECLSS	1032-0	10-32	.030	.030	.250	.249	.340	.090	.280
		1032-1		.038	.040					
		1032-2		.054	.056					
		1032-3		.087	.091					
ES	ECLS	1224-1	12/24	.038	.040	.277	.276	.370	.130	.310
		1224-2		.054	.056					
		1224-3		.087	.091					
ES	ECLS	1420-0	1/4-20	.045	.047	.344	.343	.440	.170	.340
		1420-1		.054	.056					
		1420-2		.087	.091					
		1420-3		.120	.125					
ES	ECLS	1428-1	1/4-28	.054	.056	.344	.343	.440	.170	.340
		1428-2		.087	.091					
		1428-3		.120	.125					
ES	ECLS	51618-1	5/16-18	.054	.056	.413	.412	.500	.230	.380
		51618-2		.087	.091					
		51618-3		.120	.125					
ES	ECLS	51624-1	5/16-24	.054	.056	.413	.412	.500	.230	.380
		51624-2		.087	.091					
		51624-3		.120	.125					
ES	ECLS	3816-1	3/8-16	.870	.091	.500	.499	.560	.270	.440
		3816-2		.120	.125					
		3816-3		.235	.250					
ES	ECLS	3824-1	3/8-24	.870	.091	.500	.499	.560	.270	.440
		3824-2		.120	.125					
		3824-3		.235	.250					
ES	ECLS	1213-1	1/2-13	.120	.125	.656	.655	.810	.360	.630
		1213-2		.235	.250					
ES	ECLS	1220-1	1/2-20	.120	.125	.656	.655	.810	.360	.630
		1220-2		.235	.250					

- Type ES and ESS are recommended for use in steel or aluminum sheet HRB 75~80 or less.
- Type ECLS and ECLSS are recommended for use in steel or aluminum sheet HRB 65~70 or less.

Self Clinching Nuts

ES-M4-1 - S10

Finish:Zinc on Steel Nuts
None on Stainless Steel

Select Part No.

Select Material

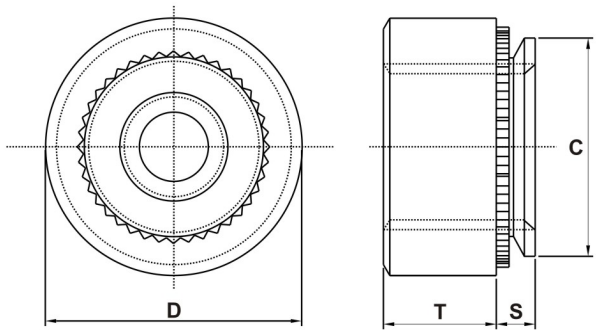

How to order Metric Standard Self-Clinching Nuts

Type / Material		Part No.	Thread Size	S Max.	Min. Sheet Thickness	Hole Size In Sheet +0.08 −0.00	C Max.	D ± 0.25	T ± 0.25	Min. distance centre line hole to sheet edge
Carbon Steel	Stainless Steel									
ES	ECLS	M2-0	M2x0.4	0.77	0.8	4.22	4.2	6.3	1.5	4.8
		M2-1		0.97	1					
		M2-2		1.38	1.4					
ES	ECLS	M2.5-0	M2.5x0.45	0.77	0.8	4.22	4.2	6.3	1.5	4.8
		M2.5-1		0.97	1					
		M2.5-2		1.38	1.4					
ES	ECLS	M3-0	M3x0.5	0.77	0.8	4.22	4.2	6.3	1.5	4.8
		M3-1		0.97	1					
		M3-2		1.38	1.4					
ES	ECLS	M3.5-0	M3.5x0.6	0.77	0.8	4.75	4.73	7.1	1.5	5.6
		M3.5-1		0.97	1					
		M3.5-2		1.38	1.4					
ES	ECLS	M4-0	M4x0.7	0.77	0.8	5.41	5.38	7.9	2	6.9
		M4-1		0.97	1					
		M4-2		1.38	1.4					
ESS	ECLSS	M5-0	M5x0.8	0.77	0.8	6.35	6.33	8.7	2	7.1
		M5-1		0.97	1					
		M5-2		1.38	1.4					
ES	ECLS	M6-0	M6x1.0	0.89	0.92	8.75	8.73	11.05	4.08	8.6
		M6-1		1.15	1.2					
		M6-2		1.38	1.4					
		M6-3		2.21	2.3					
ES	ECLS	M8-1	M8x1.25	1.38	1.4	10.5	10.47	12.65	5.47	9.7
		M8-2		2.21	2.3					
ES	ECLS	M10-1	M10x1.5	2.21	2.31	14	13.97	17.35	7.48	13.5
		M10-2		3.05	3.18					

- Type ES and ESS are recommended for use in steel or aluminum sheet HRB 75~80 or less.
- Type ECLS and ECLSS are recommended for use in steel or aluminum sheet HRB 65~70 or less.

Self Clinching Studs

EFH-832-6-S10

Finish:Zinc on Steel
None on Stainless

Select Length Code

Select Part No.

Select Type and Material

How to order Standard Self-Clinching Studs

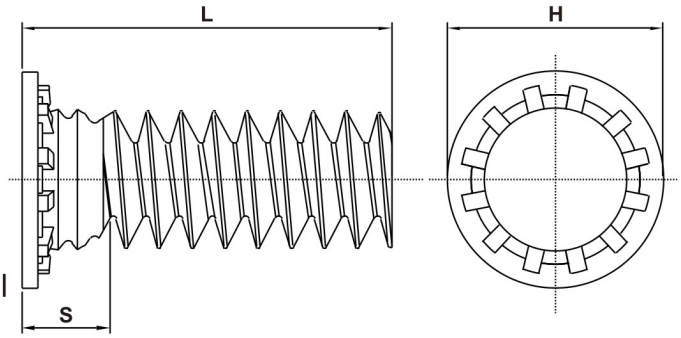

Type		Part No.	Thread Size	Length Code"L"± .015 (Length Code in 16th of an inch)										Min. Sheet In Thickness	Hole Size In Sheet +.003 -.000	Max Hole In Attach Parts	H ±.015	S Max.	Min. distance centre line hole to sheet edge
Material																			
Carbon Steel	Stainless Steel			.250	.312	.375	.500	.625	.750	.875	1.00	1.25	1.50						
EFH	EFHS	256	2#56	4	5	6	8	10	12					.040	.085	.105	.144	.075	.187
EFH	EFHS	440	4#40	4	5	6	8	10	12	14	16	20		.040	.111	.135	.176	.085	.219
EFH	EFHS	632	6#32	4	5	6	8	10	12	14	16	20	24	.040	.137	.160	.206	.090	.250
EFH	EFHS	832	8#32	4	5	6	8	10	12	14	16	20	24	.040	.163	.185	.237	.090	.281
EFH	EFHS	024	10#24		5	6	8	10	12	14	16	20	24	.040	.189	.210	.256	.100	.281
EFH	EFHS	032	10#32		5	6	8	10	12	14	16	20	24	.040	.189	.210	.256	.100	.281
EFH	EFHS	0420	1/4-20			6	8	10	12	14	16	20	24	.062	.249	.270	.337	.135	.312
EFH	EFHS	0518	5/16-18				8	10	12	14	16	20	24	.093	.311	.333	.376	.160	.375

Type		Part No.	Thread Size	Length Code"L"± 0.4 (Length Code in millimeters)										Min. Sheet In Thickness	Hole Size In Sheet +.008 -.000	Max Hole In Attach Parts	H ±.040	S Max.	Min. distance centre line hole to sheet edge
Material																			
Carbon Steel	Stainless Steel																		
EFH	EFHS	M2.5	M2.5x0.45	6	8	10	12	15	18					1	2.5	3.1	4.1	1.95	5.4
EFH	EFHS	M3	M3x0.5	6	8	10	12	15	18	20	25			1	3	3.6	4.6	2.1	5.6
EFH	EFHS	M3.5	M3.5x0.6	6	8	10	12	15	18	20	25	30		1	3.5	4.1	5.3	2.25	6.4
EFH	EFHS	M4	M4x0.7	6	8	10	12	15	18	20	25	30	35	1	4	4.6	5.9	2.4	7.2
EFH	EFHS	M5	M5x0.8		8	10	12	15	18	20	25	30	35	1	5	5.6	6.5	2.7	7.2
EFH	EFHS	M6	M6x1.0			10	12	15	18	20	25	30	35	1	6	6.6	8.2	3	7.9
EFH	EFHS	M8	M8x1.25				12	15	18	20	25	30	35	1	8	8.6	9.6	3.7	9.6

- Type EFH recommended for use in steel or aluminum sheet HRB 75~80 or less.
- Type EFHS recommended for use in steel or aluminum sheet HRB 65~70 or less.
- Threads are gageable to within 2 pitches of the “S” Max. dimension. A class 3B/5H maximum material commercial nut shall pass up to the“S” Max. dimension.

Self Clinching Standoffs

GENERAL DIMENSIONS

All dimensions in inches.

Thread Size	Min. Sheet Thickness	Hole Size In Sheet +.003 -.000	B Counter-Bore Dia. ± .005	C + .000 - .005	H Nominal	Min. distance centre line hole to sheet edge
440	.040	.166	.125	.165	.187	.230
6440	.040	.213	.125	.212	.250	.270
632	.040	.213	.156	.212	.250	.270
8632	.050	.281	.156	.280	.312	.310
832	.050	.281	.188	.280	.312	.310
032/024	.050	.281	.203	.280	.312	.310

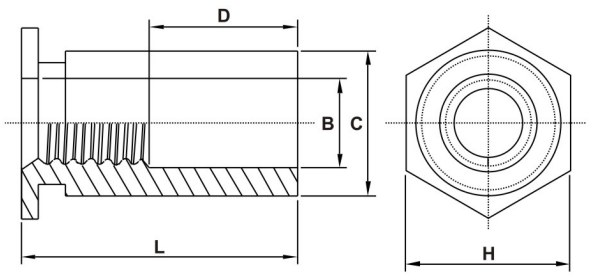

GENERAL DIMENSIONS

All dimensions in millimeters.

Thread Size	Min. Sheet Thickness	Hole Size In Sheet +0.08 −0.00	B Counter-Bore Dia. ± 0.13	C + .000 - 0.13	H Nominal	Min. distance centre line hole to sheet edge
M3	1.02	4.22	3.2	4.2	4.8	6
3.5M3	1.02	5.41	3.2	5.39	6.4	6.8
M3.5	1.02	5.41	3.9	5.39	6.4	6.8
M4	1.27	7.14	4.8	7.12	7.9	8
M5	1.27	7.14	5.35	7.12	7.9	8

ESO-832-8-S10

- Finish: Zinc on Steel, Passivate on Stainless Steel, None on Aluminum
- Select Length Code
- Select Thread Code
- Select Type and Material

How to order Standard Self-Clinching Standoffs

THREAD & LENGTH DATA

Type: Carbon Steel	Material: Stainless Steel	Material: Aluminum	Thread Code	Thread Size	Length Code"L" +.002 / -.005 (Length Code in 32nds of an inch)															
					.125	.187	.250	.312	.375	.437	.500	.562	.625	.687	.750	.812	.875	.937	1.00	1.062
ESO	ESOS	ESOA	440 6440	4-40	4	6	8	10	12	14	16	18	20	22	24					
ESO	ESOS	ESOA	632 8632	6-32	4	6	8	10	12	14	16	18	20	22	24	26	28	30	32	34
ESO	ESOS	ESOA	832	832	4	6	8	10	12	14	16	18	20	22	24	26	28	30	32	34
ESO	ESOS	ESOA	032/024	10-32 10-24	4	6	8	10	12	14	16	18	20	22	24	26	28	30	32	34
D = min full threads					**None**				**0.187**				**0.312**				**0.437**			

Type: Carbon Steel	Material: Stainless Steel	Material: Aluminum	Thread Code	Thread Size	Length Code"L" +0.05 / -0.13 (Length Code in millimeters)											
ESO	ESOS	ESOA	M3 3.5M3	M3x0.5	3	4	6	8	10	12	14	16	18			
ESO	ESOS	ESOA	M3.5	M3.5x0.6	3	4	6	8	10	12	14	16	18	20	22	25
ESO	ESOS	ESOA	M4	M4x0.7	3	4	6	8	10	12	14	16	18	20	22	25
ESO	ESOS	ESOA	M5	M5x0.8	3	4	6	8	10	12	14	16	18	20	22	25
D = min full threads					**None**				**4**			**8**			**11**	

- Type ESO recommended for use in steel or aluminum sheet HRB 75~80 or less.
- Type ESOS recommended for use in steel or aluminum sheet HRB 65~70 or less.
- Type ESOA recommended for use in steel or aluminum sheet HRB 45~50 or less.

Self Clinching Standoffs

GENERAL DIMENSIONS All dimensions in inches.

Thread Size	Min. Sheet Thickness	Hole Size In Sheet +.003 -.000	C + .000 - .005	H Nominal	Min. distance centre line hole to sheet edge
440	.040	.166	.165	.187	.230
6440	.040	.213	.212	.250	.270
632	.040	.213	.212	.250	.270
8632	.050	.281	.280	.312	.310
832	.050	.281	.280	.312	.310
032/024	.050	.281	.280	.312	.310

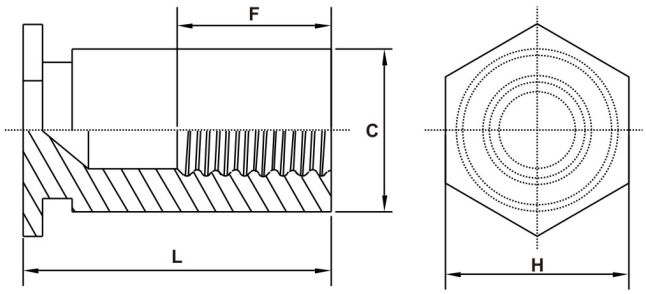

GENERAL DIMENSIONS All dimensions in millimeters.

Thread Size	Min. Sheet Thickness	Hole Size In Sheet +.008 -.000	C + .000 - .013	H Nominal	Min. distance centre line hole to sheet edge
M3	1.02	4.22	4.2	4.8	6
3.5M3	1.02	5.41	5.39	6.4	6.8
M3.5	1.02	5.41	5.39	6.4	6.8
M4	1.27	7.14	7.12	7.9	8
M5	1.27	7.14	7.12	7.9	8

EBSO-832-12-S10

- Finish:Zinc on Steel Passivate on Stainless Steel None on Aluminum
- Select Length Code
- Select Thread Code
- Select Type and Material

How to order Standard Self-Clinching Standoffs

THREAD & LENGTH DATA

Type			Thread Code	Thread Size	Length Code"L" +.002 / -.005 (Length Code in 32nds of an inch)												
Material																	
Carbon Steel	Stainless Steel	Aluminum			.312	.375	.437	.500	.562	.625	.687	.750	.812	.875	.937	1.00	1.062
EBSO	EBSOS	EBSOA	440 6440	4-40	10	12	14	16	18	20	22	24	26	28	30	32	34
EBSO	EBSOS	EBSOA	632 8632	6-32	10	12	14	16	18	20	22	24	26	28	30	32	34
EBSO	EBSOS	EBSOA	832	832	10	12	14	16	18	20	22	24	26	28	30	32	34
EBSO	EBSOS	EBSOA	032/024	10-32 10-24	10	12	14	16	18	20	22	24	26	28	30	32	34
F = Counterbore Depth ± .010					.156		.187	.250			.375						

Type			Thread Code	Thread Size	Length Code"L" +0.05 / -0.13 (Length Code in millimeters)									
Material														
Carbon Steel	Stainless Steel	Aluminum												
EBSO	EBSOS	EBSOA	M3 3.5M3	M3x0.5	6	8	10	12	14	16	18	20	22	25
EBSO	EBSOS	EBSOA	M3.5	M3.5x0.6	6	8	10	12	14	16	18	20	22	25
EBSO	EBSOS	EBSOA	M4	M4x0.7	6	8	10	12	14	16	18	20	22	25
EBSO	EBSOS	EBSOA	M5	M5x0.8	6	8	10	12	14	16	18	20	22	25
F = Counterbore Depth ± 0.25					**3.2**	**4**		**5**	**6.5**		**9.5**			

- Type EBSO recommended for use in steel or aluminum sheet HRB 75~80 or less.
- Type EBSOS recommended for use in steel or aluminum sheet HRB 65~70 or less.
- Type EBSOA recommended for use in steel or aluminum sheet HRB 45~50 or less

Self Clinching Broaching Nuts

EKF2-632-S24

Finish: Tin on Steel
Passivate on Stainless Steel

Select Part No.

Select Type and Material

How to order Standard Self-Clinching Broaching Nuts

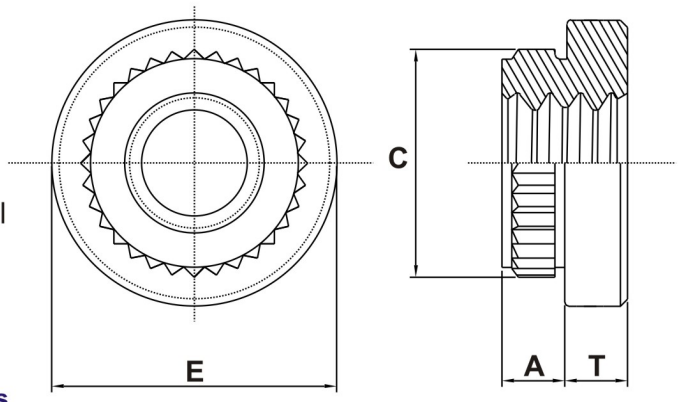

All dimensions in inches.

Type		Part No.	Thread Size	A Max.	Min. Sheet Thickness	Hole Size In Sheet +.003 -.000	C ± .003	E ± .005	T ± .005	Min. distance centre line hole to sheet edge
Material										
Carbon Steel	Stainless Steel									
EKF2	EKFS2	256	2-56	.060	.060	.147	.165	.219	.065	0.16
EKF2	EKFS2	440	4-40	.060	.060	.166	.184	.219	.065	0.17
EKF2	EKFS2	632	6-32	.060	.060	.213	.231	.281	.065	0.22
EKF2	EKFS2	832	8-32	.060	.060	.250	.268	.344	.096	0.25
EKF2	EKFS2	032	10-32	.060	.060	.272	.290	.375	.127	0.28

All dimensions in millimeters.

Type		Part No.	Thread Size	A Max.	Min. Sheet Thickness	Hole Size In Sheet +0.08 −0.00	C ± 0.08	E ± 0.13	T ± 0.13	Min. distance centre line hole to sheet edge
Material										
Carbon Steel	Stainless Steel									
EKF2	EKFS2	M2	M2x0.4	1.53	1.53	3.73	4.19	5.56	1.5	4.2
EKF2	EKFS2	M2.5	M2.5x0.45	1.53	1.53	4.22	4.68	5.56	1.5	4.4
EKF2	EKFS2	M3	M3x0.5	1.53	1.53	4.22	4.68	5.56	1.5	4.4
EKF2	EKFS2	M4	M4x0.7	1.53	1.53	6.4	6.86	8.74	2	6.4
EKF2	EKFS2	M5	M5x0.8	1.53	1.53	6.9	7.37	9.53	3	7.1

- Type EKF2 recommended for use in steel or aluminum sheet HRB 55~60 or less.
- Type EKFS2 recommended for use in steel or aluminum sheet HRB 65~70 or less.
- The standard finish of EKF2 is Electro-Plated Tin with clear preservative.

Self Clinching Flush Nuts

EF-632-1

Select Part No.

Select Type and Material

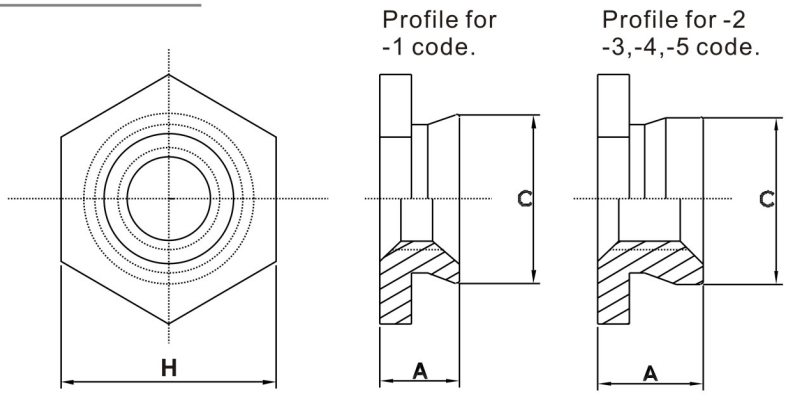

How to order Standard self-clinching flush nuts

All dimensions in inches

Type / Material / Stainless Steel	Part No.	Thread Size	A Max.	Sheet Thickness	Hole Size In Sheet +.003 -.000	C Max.	H Nominal	Min. distance centre line hole to sheet edge
EF	256-1	2-56	.060	.060-.090	.172	.171	.188	.23
	256-2		.090	.091-UP				
EF	440-1	4-40	.060	.060-.090	.172	.171	.188	.23
	440-2		.090	.091-UP				
EF	632-1	6-32	.060	.060-.090	.213	.212	.250	.27
	632-2		.090	.091-UP				
EF	832-1	8-32	.060	.060-.090	.290	.289	.312	.28
	832-2		.090	.091-UP				
EF	032-1	8-32	.060	.060-.090	.312	.311	.343	.31
	032-2		.090	.091-UP				
EF	0420-3	1/4-20	.120	.128-.155	.344	.343	.375	.34
	0420-4		.151	.156-.186				
	0420-5		.182	.187-UP				

All dimensions in millimeters.

Type / Material / Stainless Steel	Part No.	Thread Size	A Max.	Sheet Thickness	Hole Size In Sheet +0.08 −0.00	C Max.	H Nominal	Min. distance centre line hole to sheet edge
EF	M2-1	M2x0.4	1.53	1.53-2.3	4.37	4.35	4.8	6
	M2-2		2.3	2.32-UP				
EF	M2.5-1	M2.5x0.45	1.53	1.53-2.3	4.37	4.35	4.8	6
	M2.5-2		2.3	2.32-UP				
EF	M3-1	M3x0.5	1.53	1.53-2.3	4.37	4.35	4.8	6
	M3-2		2.3	2.32-UP				
EF	M4-1	M4x0.7	1.53	1.53-2.3	7.37	7.35	7.9	7.2
	M4-2		2.3	2.32-UP				
EF	M5-1	M5x0.8	1.53	1.53-2.3	7.92	7.9	8.7	8
	M5-2		2.3	2.32-UP				
EF	M6-3	M6x1	3.05	3.18-3.94	8.74	8.72	9.5	8.8
	M6-4		3.84	3.96-4.72				
	M6-5		4.63	4.75-UP				

- Type EF recommended for use in steel or aluminum sheet HRB 65~70 or less.
- The standard finish of EF is passivate.

Self Clinching Blind Fasteners

EB-832-1-S10

Finish:Zinc on Steel
None on Stainless

Select Part No.

Select Type and Material

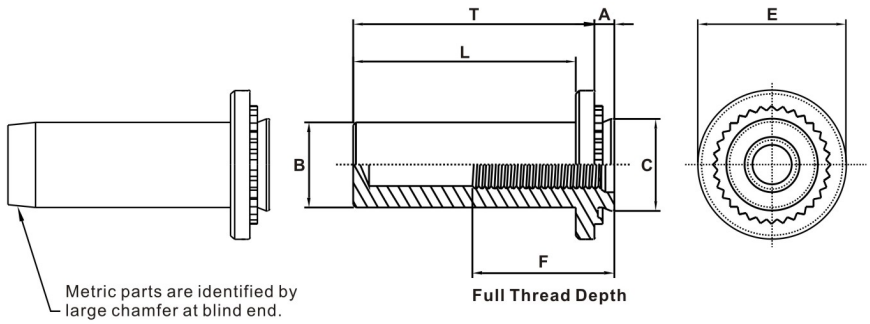

How to order Standard Self-Clinching Blind Fasteners

All dimensions in inches.

Type		Part No.	Thread Size	A Max.	Min. Sheet Thickness	Hole Size In Sheet +.003 -.000	B Max.	C Max.	E ± .010	F Min.	L Max.	T ± .010	Min. distance centre line hole to sheet edge
Material													
Carbon Steel	Stainless Steel												
EB	EBS	440-1	4-40	.040	.040	.166	.150	.165	.250	.210	.335	.380	.190
		440-2		.056	.056								
EB	EBS	632-1	6-32	.040	.040	.1875	.169	.187	.280	.230	.335	.380	.220
		632-2		.056	.056								
EB	EBS	832-1	8-32	.040	.040	.213	.204	.212	.310	.280	.385	.440	.270
		832-2		.056	.056								
EB	EBS	032-1	10-32	.040	.040	.250	.235	.249	.340	.280	.385	.440	.280
		032-2		.056	.056								
EB	EBS	0420-1	1/4-20	.560	.560	.344	.305	.343	.430	.310	.500	.560	.340
		0420-2		.090	.090								

All dimensions in millimeters

Type		Part No.	Thread Size	A Max.	Min. Sheet Thickness	Hole Size In Sheet +0.08 −0.00	B Max.	C Max.	E ±0 .25	F Min.	L Max.	T ± 0.25	Min. distance centre line hole to sheet edge
Material													
Carbon Steel	Stainless Steel												
EB	EBS	M3-1	M3x0.5	1	1	4.25	3.84	4.22	6.35	5.3	8.5	9.6	4.8
		M3-2		1.4	1.4								
EB	EBS	M4-1	M4x0.7	1	1	5.4	5.2	5.38	7.95	7.1	9.8	11.2	6.9
		M4-2		1.4	1.4								
EB	EBS	M5-1	M5x0.8	1	1	6.4	6.02	6.38	8.75	7.1	9.8	11.2	7.1
		M5-2		1.4	1.4								
EB	EBS	M6-1	M6x1	1	1	8.75	7.8	8.72	11.1	7.8	12.7	14.3	8.6
		M6-2		2.3	2.3								

- Type EB are recommended for use in steel or aluminum sheet HRB 75~80 or less.
- Type EBS are recommended for use in steel or aluminum sheet HRB 65~70 or less.